TOA

BI-DIRECTIONAL SPEAKER

PJ-430W-AS

■DESCRIPTION

The PJ-430W-AS is a bi-directional projection speaker designed for surface-mount installation on walls or ceilings. It features two speaker units and a construction ideal for use in a voice alarm system. The input power can be selected according to the markings on the terminal. The screw terminals (steatite) make input cable connections easy and allow for bridge wiring.

■SPECIFICATIONS

Rated Input	30 W (100 V line) or 15 W (70 V line)
Rated Impedance	100 V line: 330 Ω (30 W), 670 Ω (15 W), 1 kΩ (10 W) 70 V line: 330 Ω (15 W), 670 Ω (7.5 W), 1 kΩ (5 W)
Sensitivity (SPL) Max. SPL	89 dB (1 W, 1 m) (500 Hz – 5 kHz, pink noise, 2 speakers) 103 dB (30 W, 1 m) (500 Hz – 5 kHz, pink noise, 2 speakers)
Frequency Response	97 Hz – 20 kHz (Peak –20 dB)
Coverage Angle (–6 dB)	2x Hor./Ver. : 131° (500 Hz), 162° (1 kHz), 71° (2 kHz), 59° (4 kHz)
Environmental type	IP44 (indoor and outdoor installation)
Speaker Component	2x 10 cm (4") double cone-type
Operating Temperature	–25 °C to +70 °C (13 °F to 158 °F)
Applicable Cable size	Outer diameter : ø6.5 – ø12.5 mm (0.26" – 0.49"). Conductor : Solid wire or Stranded wire (7-core wire) No bridge connection : 0.8 – 6 mm^2 (AWG18 – AWG10) for solid wire 0.8 – 4 mm^2 (AWG18 – AWG12) for stranded wire Bridge connection : 0.8 – 2.1 mm^2 (AWG18 – AWG14) for solid wire 0.8 – 1.8 mm^2 (AWG18 – AWG15) for stranded wire
Cable Connection	2-pins + 3-pins Screw terminal (ceramic), can be bridge connection
Finish	Cabinet, Mounting bracket: Aluminum, white (RAL 9016 equivalent), paint Grille: Steel perforate, white (RAL 9016 equivalent), paint Terminal cover: ABS resin, white (RAL 9016 equivalent), paint
Dimensions	189 (H) x 178 (W) x 191 (D) mm (7.44" x 7.01" x 7.52")
Weight	3.5 kg (7.72 lb)
Accessory	Terminal cover with Cable gland PGB 13.5-12 grey...1,*1) Speaker mounting screw ...2

*1) One cable gland is factory-installed, for bridge connection one cable gland can be added

■APPEARANCE

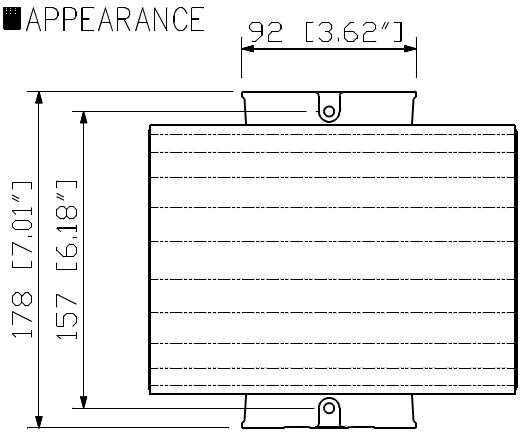

Wiring diagram

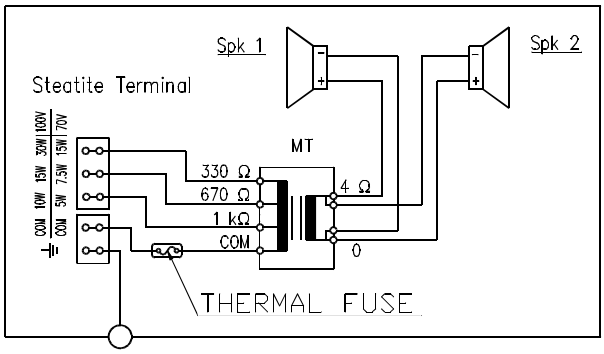

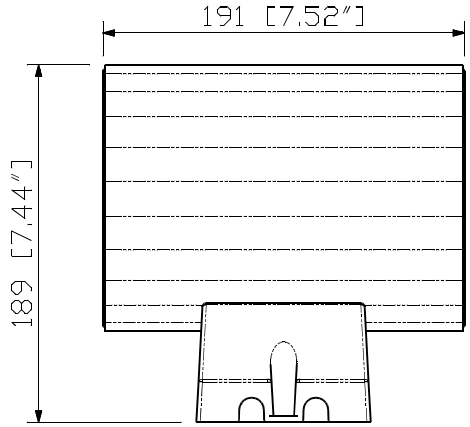

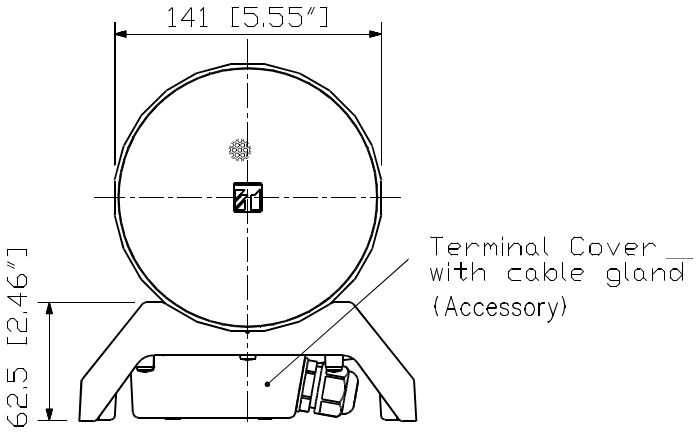

UNIT: mm SCALE: 1/4